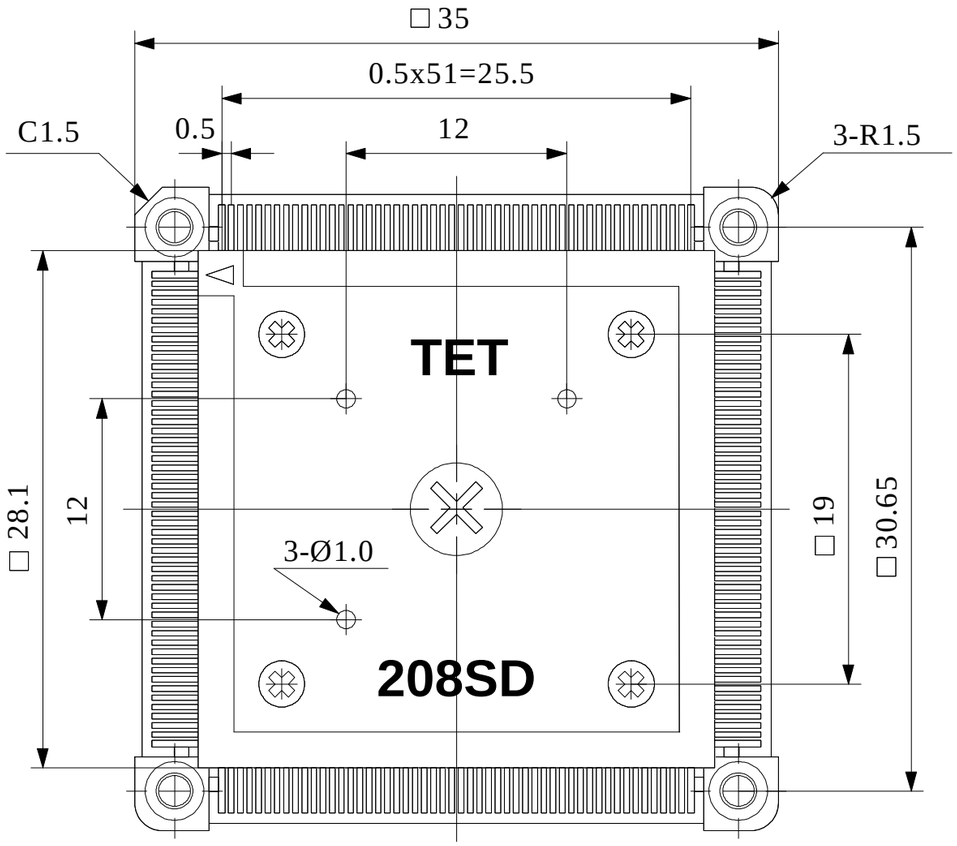

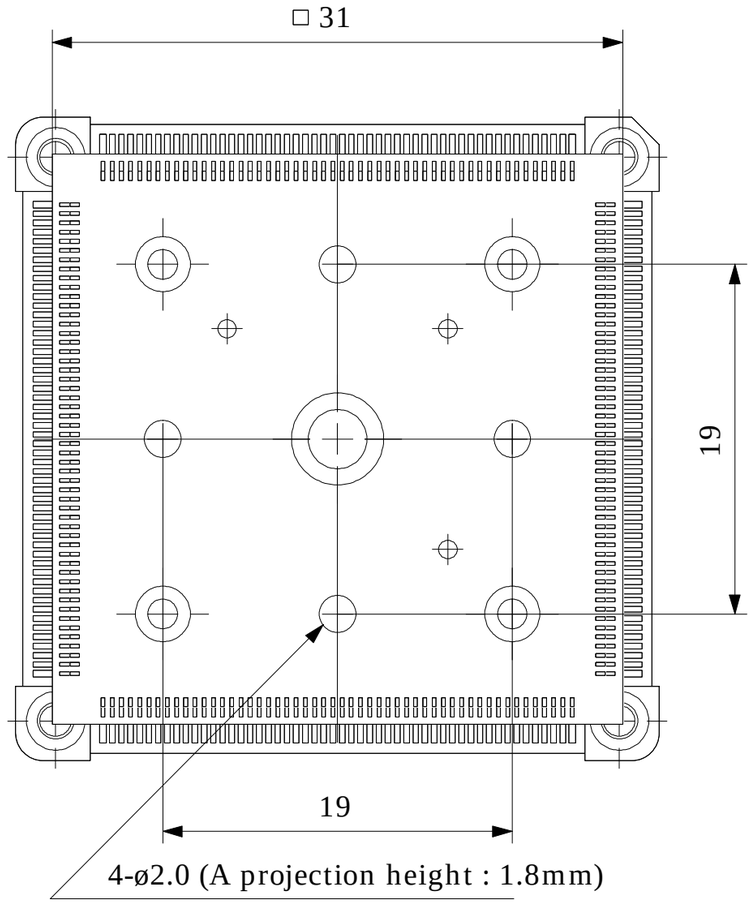

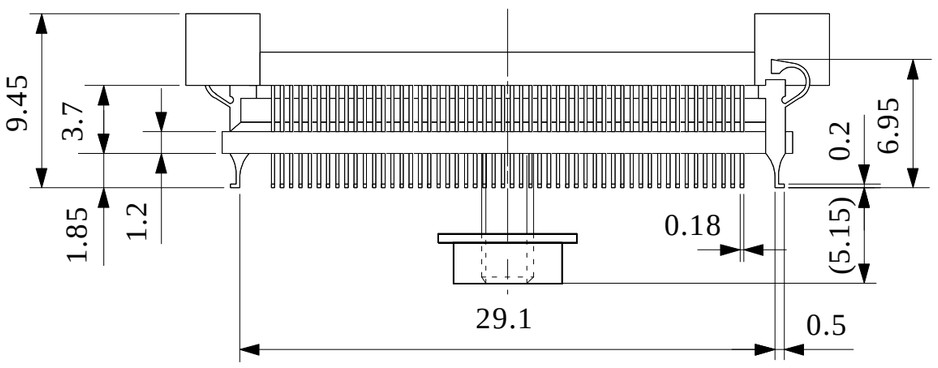

Part No.	**NQPACK208SD-SL**	
IC package	Square	
Pin count	208Pin	
Lead pitch	0.5mm	
Unit : mm		Design : M.H
TET TOKYO ELETECH CORP.		