| REVISIONS | | | | |
|---|---|---|---|---|
| ZONE | REV | DESCRIPTION | DATE | APPROVED |

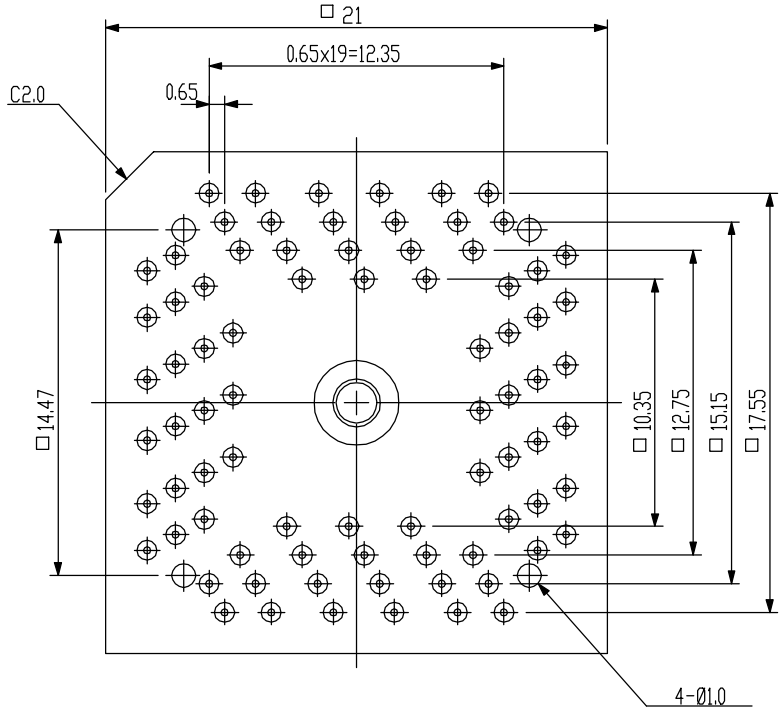


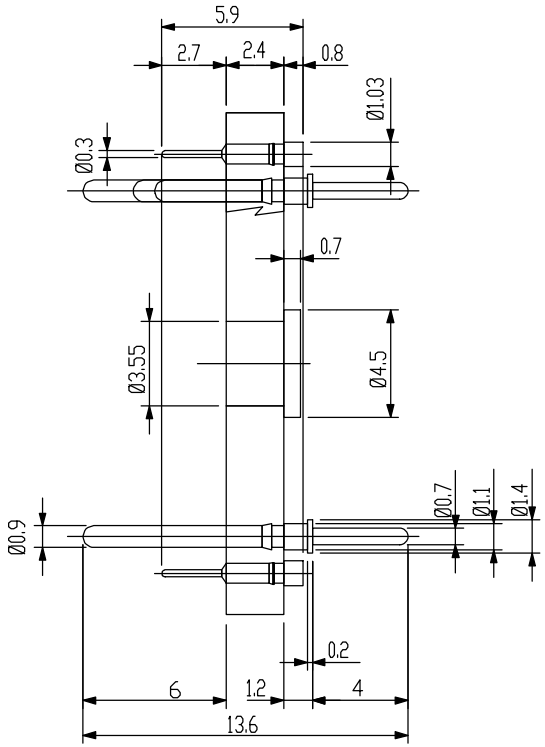


| IC package | Square |
|---|---|
| Pin count | 80 Pin |
| Lead pitch | 0.65mm |

ALL DIMENSIONS ARE IN MILLIMETERS

adapters.com

www.adapters.com

TEL:(408)855-8527
FAX:(408)855-8528

3024 Scott Blvd.
Santa Clara, CA 95054

*An Embedded Systems Solutions Company*

DO NOT SCALE DRAWING

DESCRIPTION:
RECEP-TQ-080Q65-6mmGP-FSTNR

| SIZE | DATE: | PART NO. | REV |
|---|---|---|---|
| A | 5-2-02 | 000-2871 | |

| SCALE | CHECKED: | DRAWN BY: | SHEET |
|---|---|---|---|
| 1:1 | Gabor Kardos | S. Barcellos | 1of1 |