REVISIONS				
ZONE	REV	DESCRIPTION	DATE	APPROVED

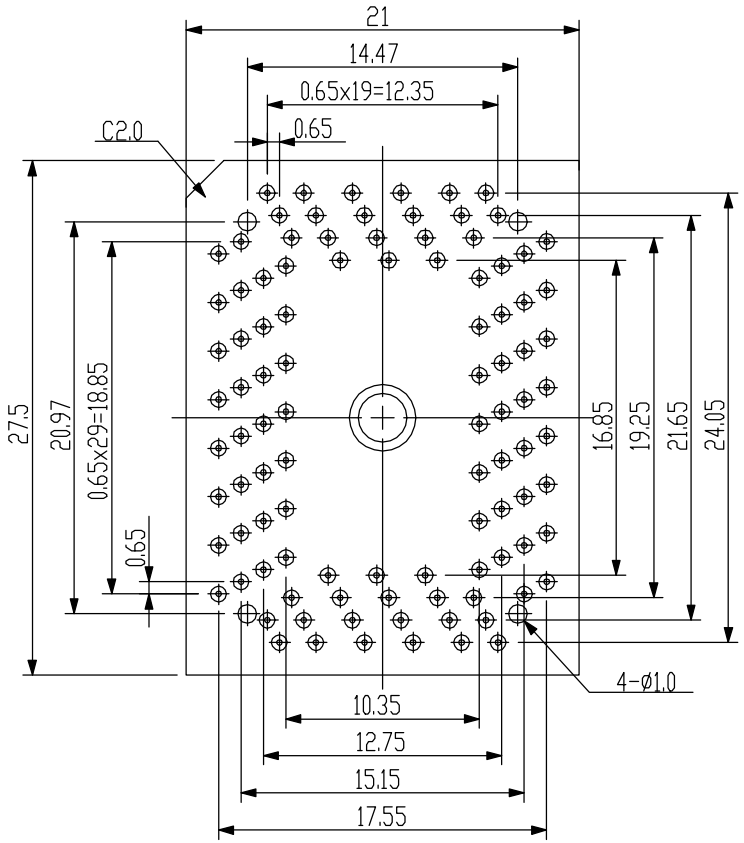

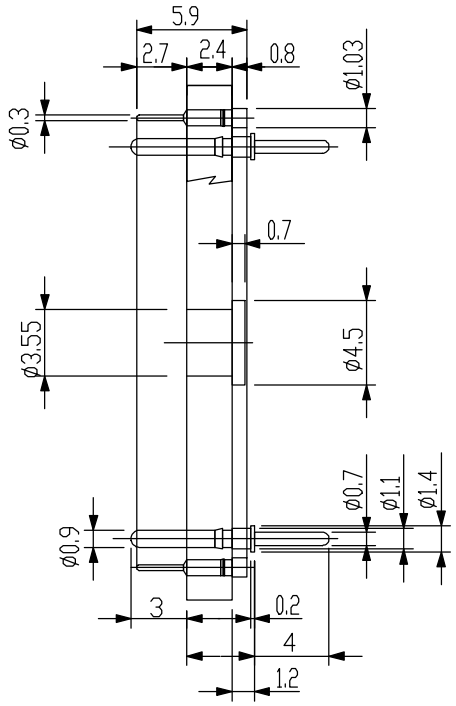

IC package	Rectangle
Pin count	100 Pin
Lead pitch	0.65mm

ALL DIMENSIONS ARE IN MILLIMETERS

adapters.com
www.adapters.com
TEL:(408)855-8527
FAX:(408)855-8528
3024 Scott Blvd.
Santa Clara, CA 95054

An Embedded Systems Solutions Company

DO NOT SCALE DRAWING

DESCRIPTION: RECEP-TQ-100Q65R-3mmGP-FSTNR

SIZE	DATE:	PART NO.	REV
A	5-6-02	000-2957	

SCALE	CHECKED:	DRAWN BY:	SHEET
1:1	Gabor Kardos	S. Barcellos	1 of 1